INSTALLATION INSTRUCTIONS FOR Whiz Bidirectional

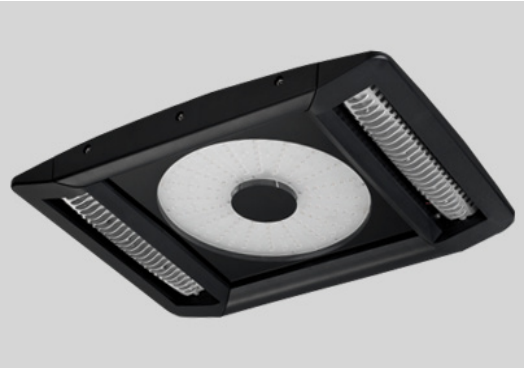

IMPORTANT SAFETY INFORMATION. READ AND FOLLOW ALL SAFETY INSTRUCTIONS.

Follow label information and instructions concerning wet or damp locations, installation near combustible insulation or building materials, and proper lamping. Before wiring to power supply and during servicing or relamping, turn off power at fuse or circuit breaker. All servicing or relamping must be performed by qualified service personnel. Product must be grounded to avoid potential electric shock or other potential hazard. Product must be at locations and at heights and in a manner consistent with its intended use, and in compliance with Electrical Code and local codes. The use of accessory equipment not recommended by the manufacturer or installed contrary to instructions may cause an unsafe condition. Do not block light emanating from product in whole or part, as this may cause an unsafe condition.

Electrical

Power Input: 120V-277VAC
Operating temperature: -40°F~131°F
Environment: UL Wet location listed
Rated Life: >50,000 hours (L70)

Housing

Dimensions: 22.34" (567mm) x 15.78" (400mm)
Height: 2.4"(60mm)
Material: High pressure die-cast aluminum, tempered glass
Mounting: Bracket, Pendant or Stem standard length is 2 or 4ft

Stem Installation Instruction Steps

1. Mount against the ceiling structure, the power bracket with the power box, using ¼ x 1 inch self drilling tapping screws. When the bracket is mounted, slide the power box upwards towards the ceiling, and fasten the two side screws to secure the power box at the adjusted height. Make sure all screws are tightly secured.

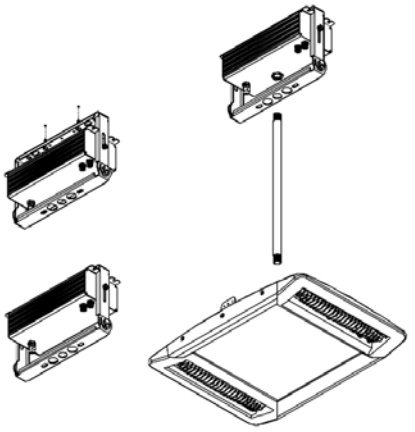

2. Insert and screw in the stem to the canopy structure located on top side of the light fixture. Insert the other side of the stem through the middle hole on the bottom side of the bracket. Use a lock nut to secure the stem onto the bracket. Make sure all screws are tightly secured.

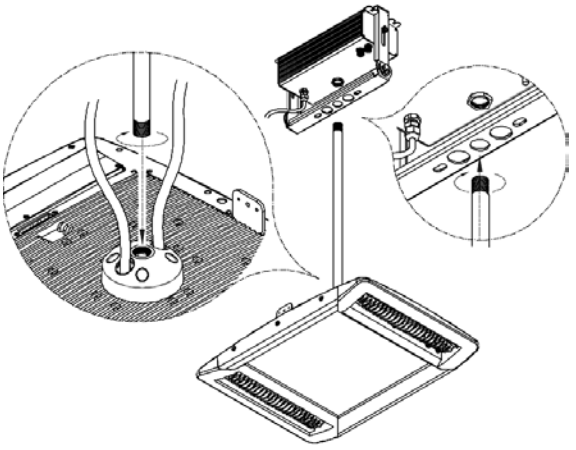

3. Route the two power cables attached to the top side of the light fixture through the holes on the bottom side of the bracket. Connect and screw in the two cables to the two connectors on the power box.

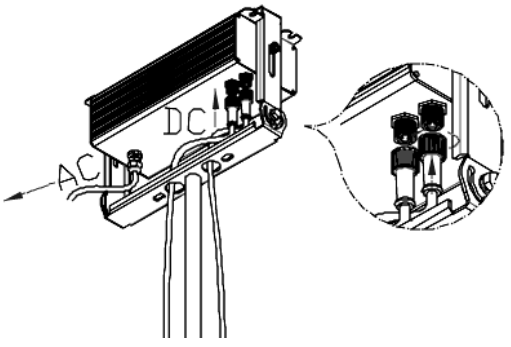

METEOR

19745 Colima Rd #1-807,
Rowland Heights, CA 91748
P: 213.255.2060
F: 213.596.3704
www.meteor-lighting.com

INSTALLATION INSTRUCTIONS FOR Whiz Bidirectional

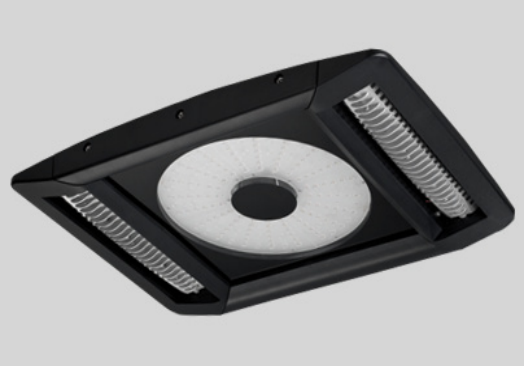

IMPORTANT SAFETY INFORMATION. READ AND FOLLOW ALL SAFETY INSTRUCTIONS.

Follow label information and instructions concerning wet or damp locations, installation near combustible insulation or building materials, and proper lamping. Before wiring to power supply and during servicing or relamping, turn off power at fuse or circuit breaker. All servicing or relamping must be performed by qualified service personnel. Product must be grounded to avoid potential electric shock or other potential hazard. Product must be at locations and at heights and in a manner consistent with its intended use, and in compliance with Electrical Code and local codes. The use of accessory equipment not recommended by the manufacturer or installed contrary to instructions may cause an unsafe condition. Do not block light emanating from product in whole or part, as this may cause an unsafe condition.

Pendant Installation Instruction Steps

1. Mount against the ceiling structure, the power bracket with the power box, using ¼ x 1 inch self drilling tapping screws. When the bracket is mounted, slide the power box upwards towards the ceiling, and fasten the two side screws to secure the power box at the adjusted height. Make sure all screws are tightly secured.

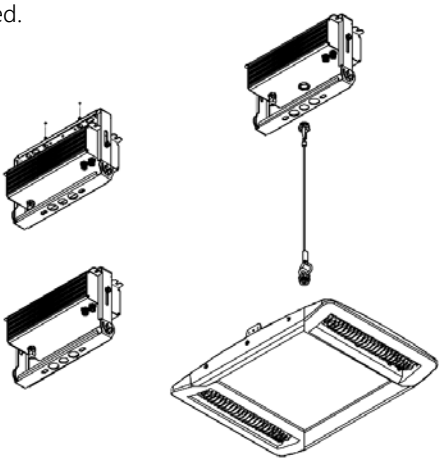

2. Secure the ring hook using a lock nut onto the bottom side of the bracket. One side of the pendant cable connects to the ring hook on the bracket. Screw in and secure the other ring hook onto the top side of the light fixture. Connect the pendant cable to the ring hook on the light fixture. Make sure all screws are tightly secured.

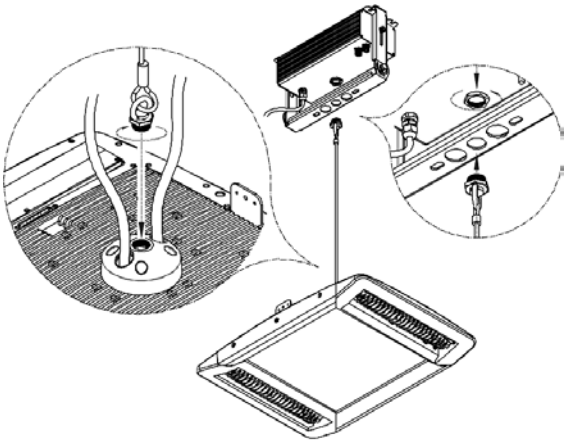
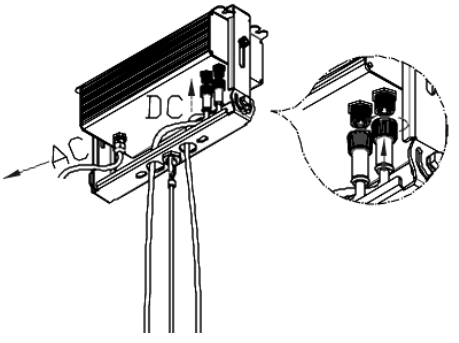
3. Route the two power cables attached to the top side of the light fixture through the holes on the bottom side of the bracket. Connect and screw in the two cables to the two connectors on the power box.