Specification

20150318

Tetriss Series-280

Modular High Lumen LED Luminaire

29000 lm@5000K

Optional: 0-10V Dimming / DMX(available in Q2)

Type :

Project :

Quantity:

Note :

Bracket

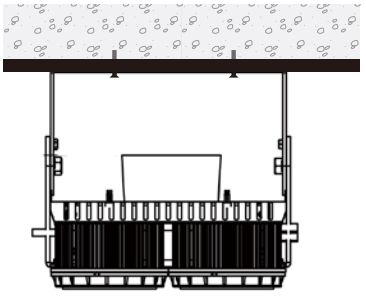

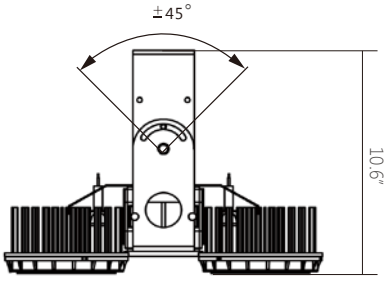

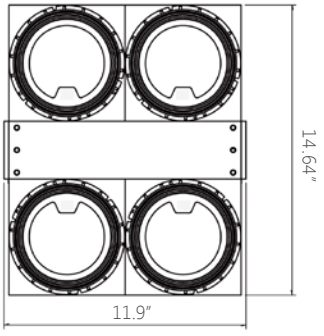

Electrical

Wattage: 280W(up to 29000 lm @ 5000K)
Power Input: 120-277 VAC
Operating temperature: -40°F~131°F
Environment: Wet location; IP66
Rated Life: >50,000 hours (L70)
Surge Protection: 7.5KV

LED Technology

- LEDs available in 3000K, 4000K, 5000K, CCT.
- LED color tolerance within 3-step McAdam Ellipse
- CRI75 standard for 4000K and 5000K, CRI85 standard for 3000K.
- Offered in 20°, 40°, 55° optical distributions

Dimming

- **0-10V**(dim to 10%)
- **DMX**(available in Q2)

Housing

Dimensions: 14.64" (372mm) x 11.9" (302mm)
Height: 10.6" (270mm)
Weight: 24.03 lbs
Material: Cold forged aluminum heat sink, tempered glass
Housing Finish: Black
Mounting: Bracket

Warranty

5 year limited warranty. See www.meteor-lighting.com for details.

Lumen Output Table*

CCT	Beam Angle 20°	Beam Angle 40°	Beam Angle 55°
5000K	29110 lm	28310 lm	27990 lm
4000K	28550 lm	27870 lm	27180 lm
3000K	23980 lm	23410 lm	22755 lm

Efficacy up to 103.9 LPW.
*Tolerance ±8%

c UL us LISTED

Tetriss Series-280

Modular High Lumen LED Luminaire

29000 lm@5000K

Optional: 0-10V Dimming / DMX(available in Q2)

Ordering Guide:

Ex.TS-280-30K-120-20-B-V-STD

Model	Color Temp	Voltage	Beam Angle	Finish	Dimming	Mounting	Optional
TS-280					V	STD	
	30K (3000K) **40K** (4000K) **50K** (5000K)	**120** (120V) **277** (277V)	**20** **40** **55**	**B** (Black)	**V** (0-10V)	**STD** Standard	**SP**[1] Surge protector **OUT** Outdoor installation **NAT** Natatorium installation

Notes: [1]Surge protector for up to 17.5kV. Applicable for unstable mains or facilities using high power machinery.

Candlepower Photometrics*

Note: +/- 8% tolerance for all values.

CCT: 5000K
Beam angle: 20 deg

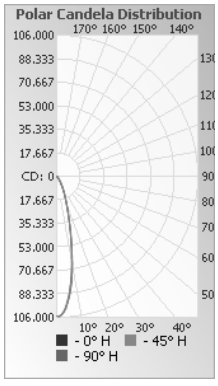

Zonal Lumen

Zone	Lumens	% Luminaire
0-40	25,841.30	88.80%
0-60	27,570.40	94.80%
0-90	29,088.10	100%
90-180	0	0.00%
0-180	29088.10	100%

Candela Distribution

Deg	Candela
0	104969
5	94816
15	37386
25	11308
35	2719
45	1142
55	793
65	534
75	349
85	220
90	157

CCT: 5000K
Beam angle: 40 deg

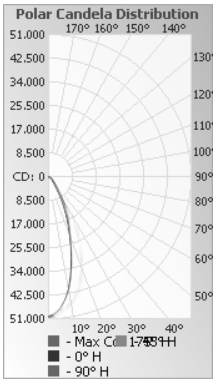

Zonal Lumen

Zone	Lumens	% Luminaire
0-40	24,401.80	86.30%
0-60	27,205.00	96.20%
0-90	28,285.20	100%
90-180	0	0.00%
0-180	28,285.20	100%

Candela Distribution

Deg	Candela
0	50137
5	47532
15	31318
25	14442
35	4271
45	2001
55	1114
65	624
75	251
85	37
90	28

CCT: 5000K
Beam angle: 55 deg

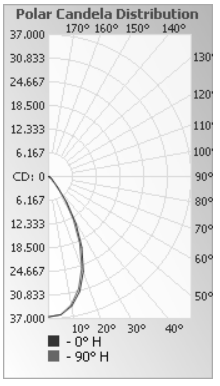

Zonal Lumen

Zone	Lumens	% Luminaire
0-40	25,057.70	89.70%
0-60	27,331.50	97.90%
0-90	27,914.00	100%
90-180	0	0.00%
0-180	27,914.00	100%

Candela Distribution

Deg	Candela
0	36511
5	36097
15	30967
25	20305
35	8204
45	1679
55	740
65	356
75	134
85	15
90	1

***CCT MULTIPLIER**

30K	40K	50K
0.83	0.97	baseline

METEOR

Meteor LED reserves the right to make changes to this product at any time without prior notice and such modification shall be shall be effective immediately.

ILOS Corporation 19745 Colima Rd #1-807, Rowland Heights, CA 91748 P: 213.255.2060 F: 213.596.3704
www.meteor-lighting.com